RevNo	Revision note	Date	Signature	Checked

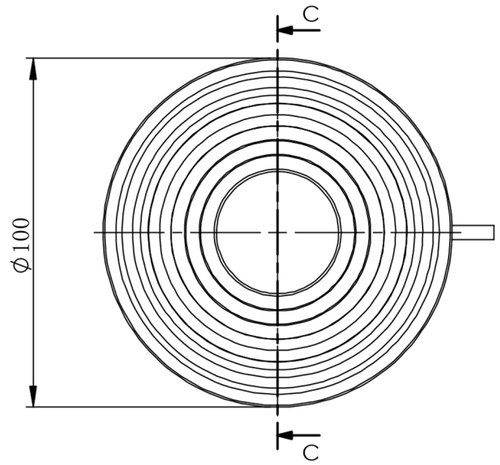

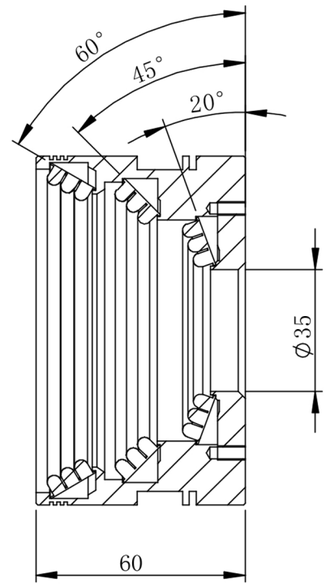

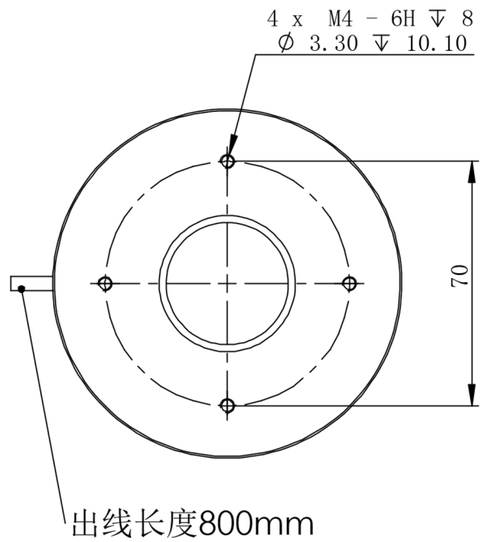

剖面 C-C

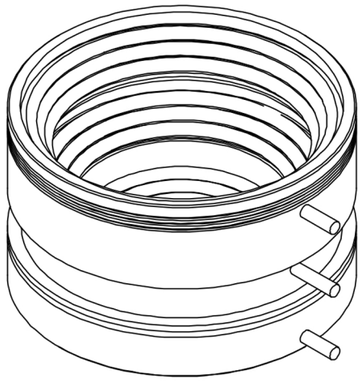

Details of Connector

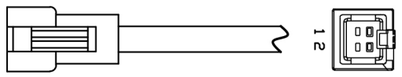

Pin1: - (Blue)
Pin2: + (Red)

Connector Type: SMR-03V-B (Light Side)
SMP-03V-BC (Power Supply Side)

Specification:

MODEL	PL-AOI100-W/-B/-G/-UV	-R/-IR850/-IR940
Wavelenth (nm)	6500K/470/530/385	625/850/940
Power Supply	DC24V/18 (W)	

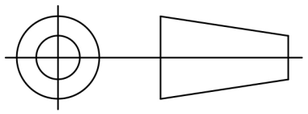

Itemref	Quantity	Material: AL/ACRIL			Article No./Reference	
				Filename PL-AOI100		Scale 1/1
				PL-AOI100-U		
				PL-AOI100-0000	Edition VER.1.0	Sheet 1